ECU Condensation Drains

The present technical bulletin contains technical information aimed to support/improve Drass equipment currently in operation.

You are kindly requested to:

- Communicate if this document and those following have to be sent to different e-mail addresses.
- Revert for any clarification needed.
- Involve Drass for implementation of suggested modifications (if any).
- Always inform Drass of any modification to Drass equipment to verify safety, allow traceability and life cycle support.

Please note that technical bulletins will be available at www.drass.it for permanent consultation.

1 Reason for issue

An improvement for A0901-xxx and A0902-xxx ECUs has been identified in relation to the reliability of the condensation discharge function.

2 Description

The proposed arrangement can replace current configuration.

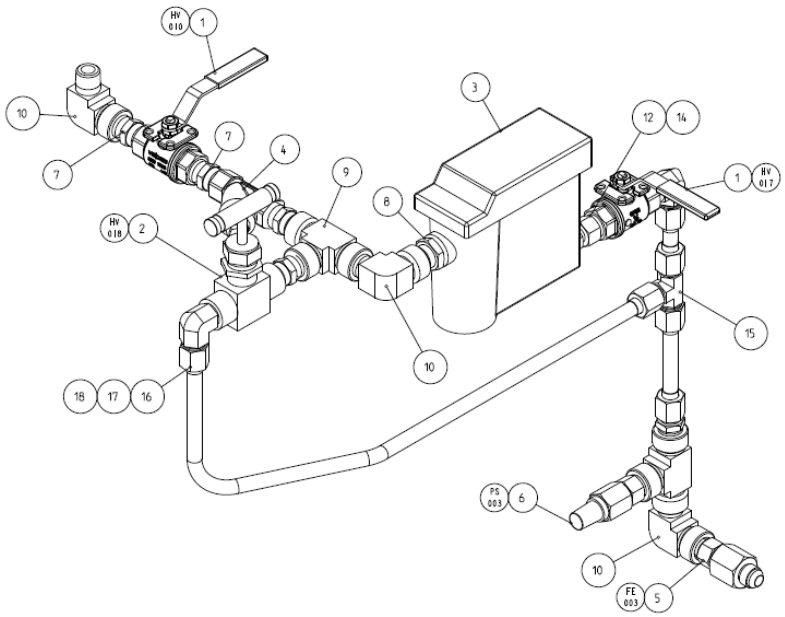

Improvement of the configuration:

- Filter: the arrangement will be protected from impurities in water.
- Leak detection: anomalies in discharging will be detected and highlighted in existing alarm logic to local/remote control.
- Manual bypass: below 10m depth or in case of a fault, the discharge can be carried out manually.

The improvement kit can be requested from adelina.blaga@drass.it; and copy to sales@drass.it with reference to "Technical Bulletin 24 – FD39-00XX"

3 Recommendations

1. Use only Drass original upgrade kit
2. Record the modification in the documentation of the Diving System
3. Report the execution of the improvement as per OEM recommendations to the class Surveyor during the annual survey.

This document is property of Drass. All rights reserved. No part of this document may be reproduced by any means, or transmitted without the written permission of Drass.